Backing Ring Nut for Mini Recessed Accent LED Light

Use where the installed wall thickness is between 1/16" to about 5/16" thick (1mm ~ 15mm). Prior to using the backing nut, remove the pre-installed metal spring clip from the light. Use a marine-grade silicone sealant on the threads of the light housing, then screw on the trim ring. Also use some sealant under the trim ring lip to bed the fixture in place. Be careful not to over-tighten the backing nut or sealant will squeeze out from behind the trim ring causing the fixture cutout to leak.

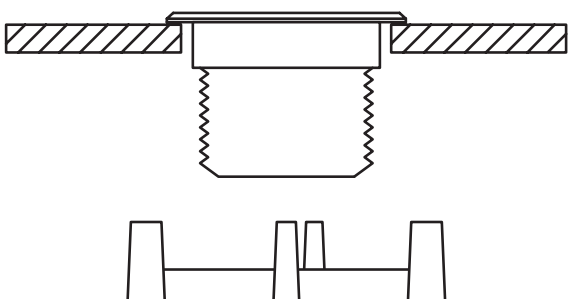

Position backing nut prongs toward wall when wall thickness is from 1/16" to about 1/4" (1-7mm)

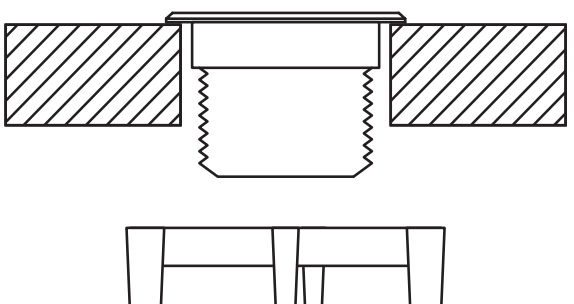

Position backing nut prongs away from wall when wall thickness is greater than 1/4", but less than 5/16" (7-15mm)